CITIZEN

Cincom

R01/04

Sliding Headstock Type CNC Automatic Lathe

Cincom's answer for machining ultra-small-diameter precision components

The acclaimed R-series of automatic lathes dedicated to small-diameter machining has evolved.
For machining watch parts, probe/connector pins, medical parts and other ultra-small-diameter components, we completely reviewed the machine construction in pursuit of 'the ideal machine' with 'true-ease-of-use'. A 20,000 min^{-1} spindle achieves the optimum cutting speed for the workpiece. This in combination with a tool post integrated with the guide bushing mount to suppress thermal displacement and feed axis drives combining linear and servo motors help to maximise accuracy, compactness and low energy consumption. Cincom's solution for machining ultra-small-diameter parts is here.

CITIZEN
R04

Rigid, thermally stable construction

With a new modular design concept, the lineup comprises two models each having two types. The R01 specializes in machining materials up to 1 mm and the R04 up to 4 mm. Type II machines are dedicated to front machining, and Type VI are equipped with common spindle modules for both the front and back spindles.

Suppression of thermal displacement has been pursued throughout the machine. The components to mount the tool slide and the guide bushing unit are unified to suppress thermal displacement and assure rigidity.
Alternative, optional tool layouts are available.

Basic construction and axis configuration

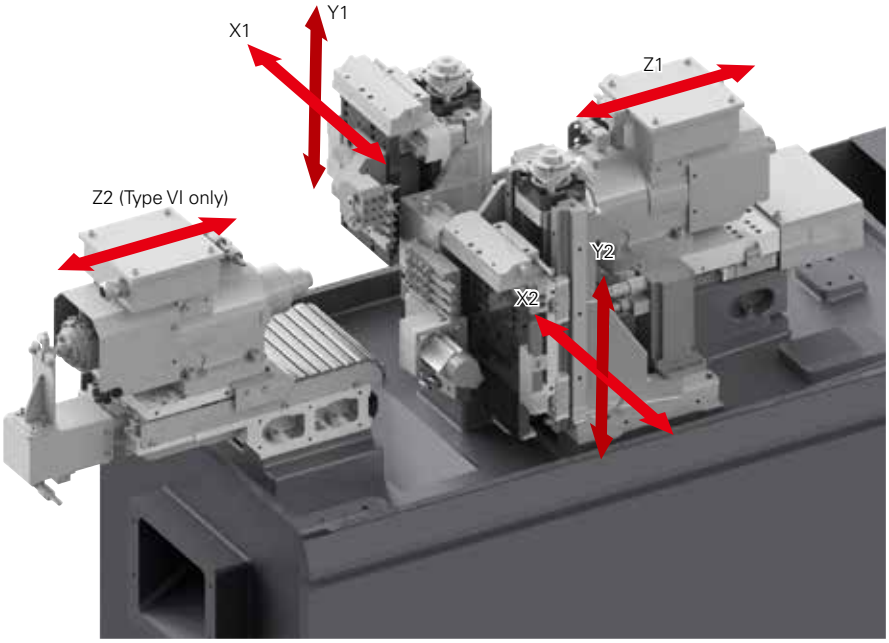

Type II

Front spindle	:	1
Drilling tools	:	4
Turning tools	:	7
Rotary tools	:	2

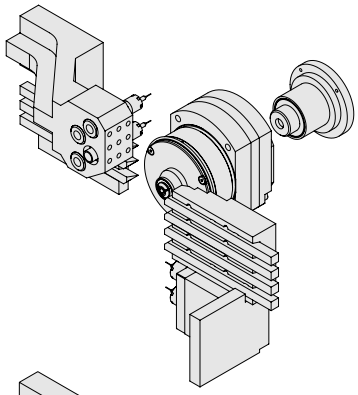

Type VI

Front spindle	:	1
Back spindle	:	1
Drilling tools	:	8
Turning tools	:	7
Rotary tools	:	2

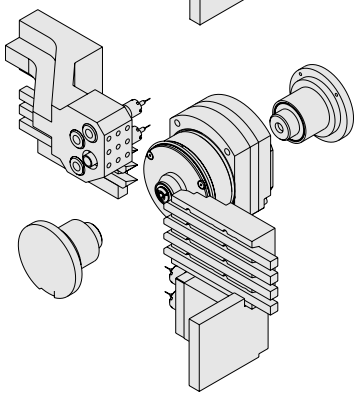

Compact high performance 20,000 min^{-1} spindles

Spindles that are 25% more compact and lighter than previous models, have low vibration and fast acceleration/deceleration.
Ceramic bearings improve high-speed stability.
Both main and back spindles are identical and are oil-cooled to reduce heat generation. Chucking force is programmable.
Cycle times are further improved by latest NC system with 'Cincom Control' which drastically reduces processing time.

Example

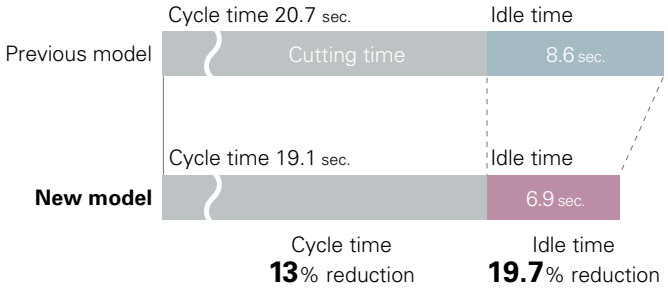

Spindle on previous model

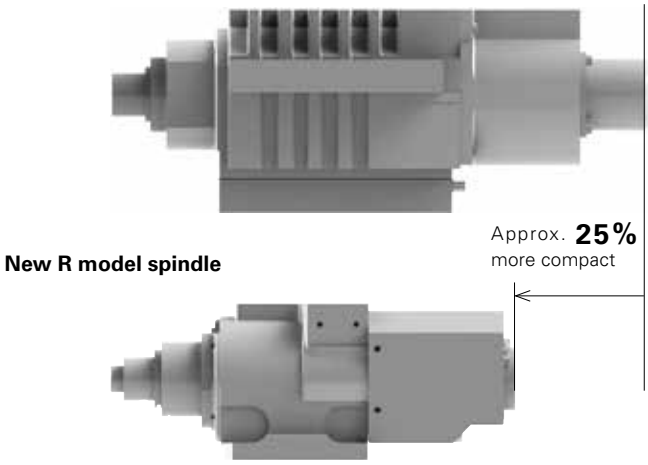

Machining

In comparison with previous models, the twin gang tool mounting capacity is increased by two turning tools and one drilling tool, thus improving the feasibility of tool layout.
The rotary tools with significantly increased rigidity adopt ER11 size chucks. With the tool shift amount changed to 2 mm, material deflection is suppressed.
The guide bushing unit is now available as 'fixed type', 'fixed open/close type' or 'rotary type', expanding the machining range.

Connector pin (1.5 mm dia., L =10 mm)

Probe pin (0.4 mm dia., L = 5 mm)

Watch part (0.3 mm dia., L = 1.5 mm)

Space-saving design; reduced running cost

A machine depth of 535 mm has been achieved by the adoption of compact spindle motors, linear motors for X axes and a new cover design. This increases machine density in a given floor area. The latest hinged cover design simplifies maintenance and fully encloses peripheral equipment. Air and power consumption is reduced through servo motor drives to Y axis, centralised lubrication to all slides and higher efficiency motors and pumps. Lubrication consumption is reduced by 12% compared to previous R model.

Improved collection rate of extremely-small-diameter workpieces

Micro-sized workpieces are difficult to collect due to their small size. For the new R series, a non-contact air blow collection and chute for small workpieces has been developed in addition to the previous knockout and suction methods for product collection. All are supplied as standard on the R01. In conjunction with optimization of the coolant discharge rate, the efficiency of component collection is improved.

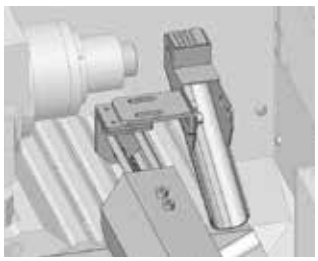

Back collection chute with air blow system

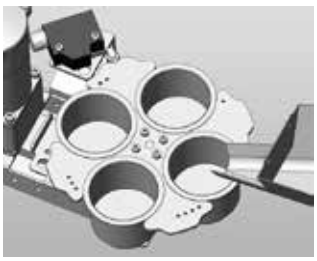

4-division workpiece separator

Display screens for ease-of-use

High-speed NC unit
The latest NC unit drastically reduces the start-up and screen switching time compared to other advanced function machines.

On-machine program check function
Using manual handle feed, operations can be run in forward or reverse directions.
You can temporarily stop program operation, edit the program and then restart operation.

Machining data
Displays the data of the required machining program item by item.

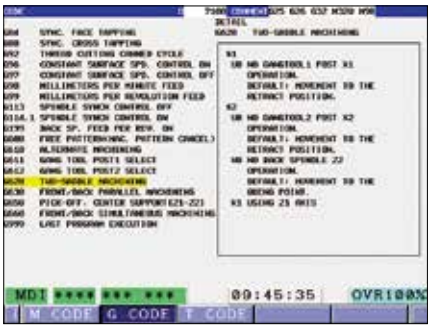

Code list display
Displays the list of G and M codes including explanations to aid programming.

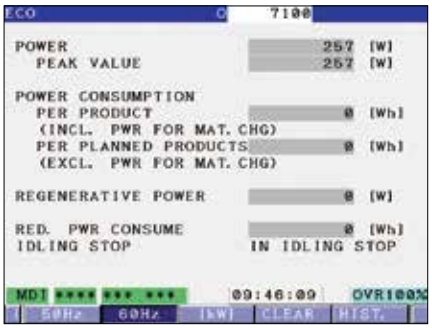

Eco screen
Displays the current power consumption, cumulative power consumption, power regeneration status, etc.

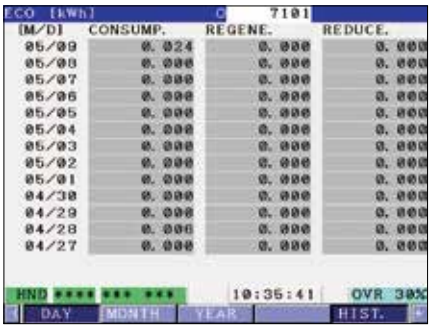

Electric energy history display
Saves the electric energy history by date which can be output as a csv file as necessary.

Options

In-machine lighting
The interior of the machining area is illuminated by an LED lamp, making it easier to change tools and to check cutting. Additional external lighting may be specified.

Open/close type guide bushing device / rotary guide bushing device
In addition to the open/close type that has made adjustment easier than with conventional models, the rotary guide bushing device is now available with all R01/R04 models.

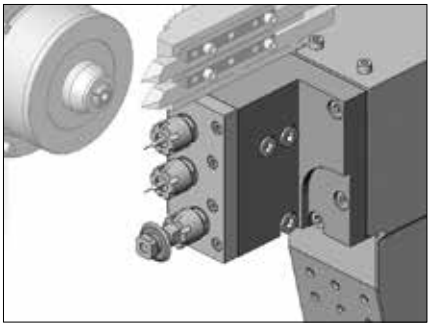

3-rotary gang tool driving unit (U34B)
Accommodates three rotary tools (ER11).
Two are 2 mm shift and one is 10 mm shift.

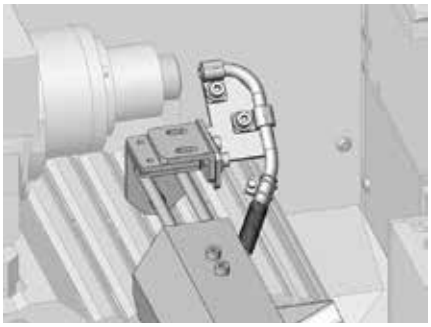

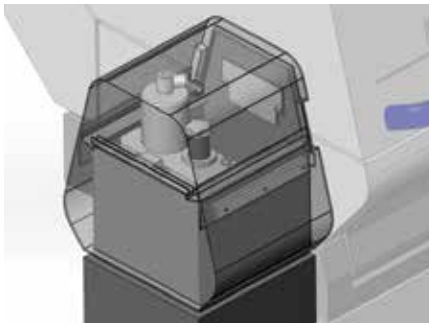

Suction type separator
This workpiece separator improves the collection rate of extremely small workpieces and is effective in separating chips from the workpiece collection section.
Applicable to workpieces with O.D. up to 1 mm dia. and length up to 5 mm.

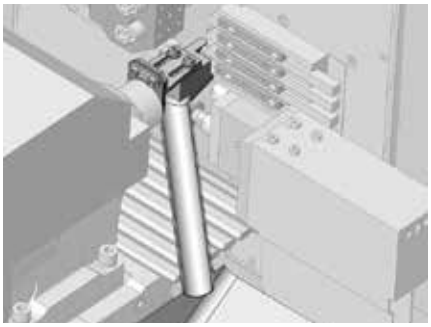

Front collection chute
Coolant is run through a semi-circular chute mounted on the back spindle, and workpieces cut-off during front machining are collected.
Applicable to workpieces with O.D. up to 2 mm dia. and length up to 20 mm. (Type VI only)

Tooling Layout

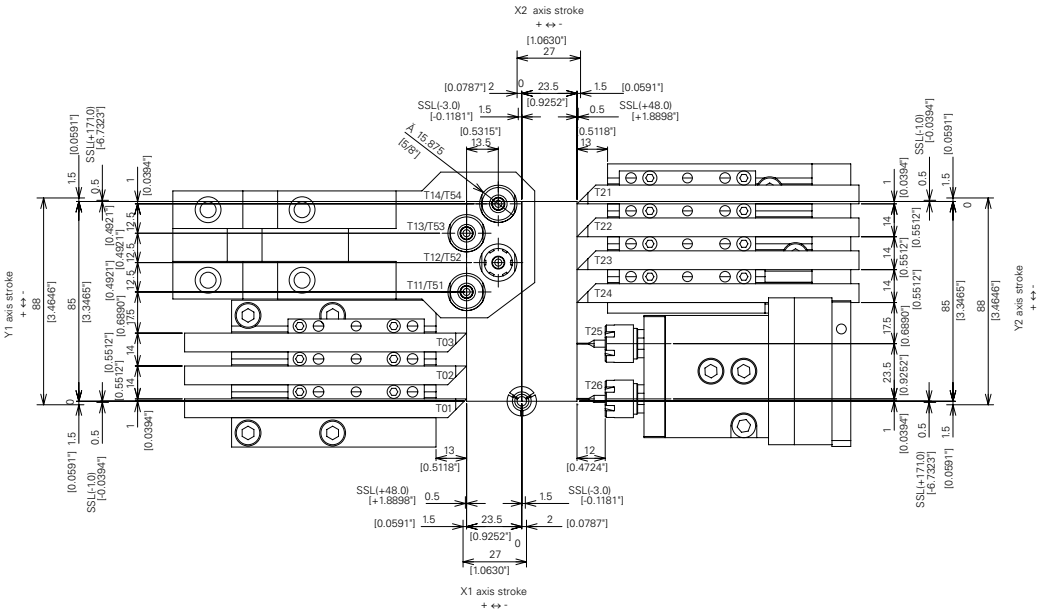

Type II

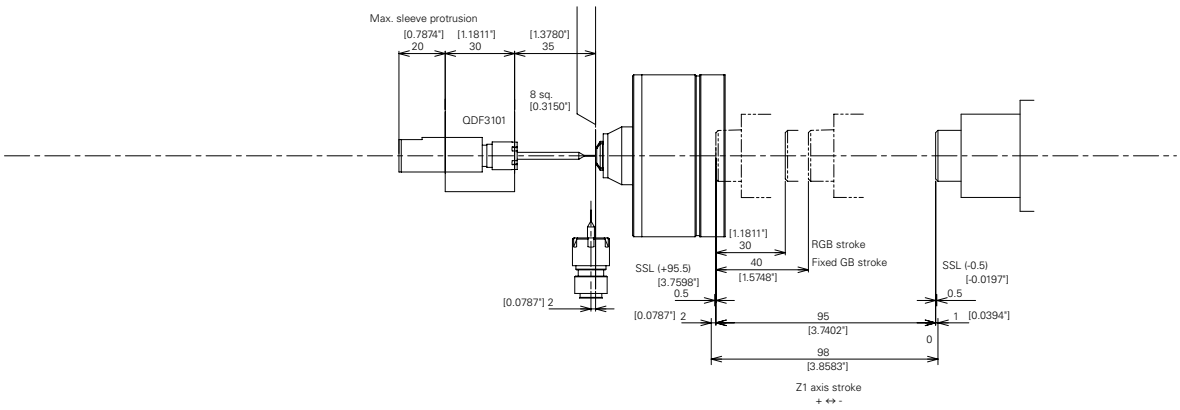

Type VI

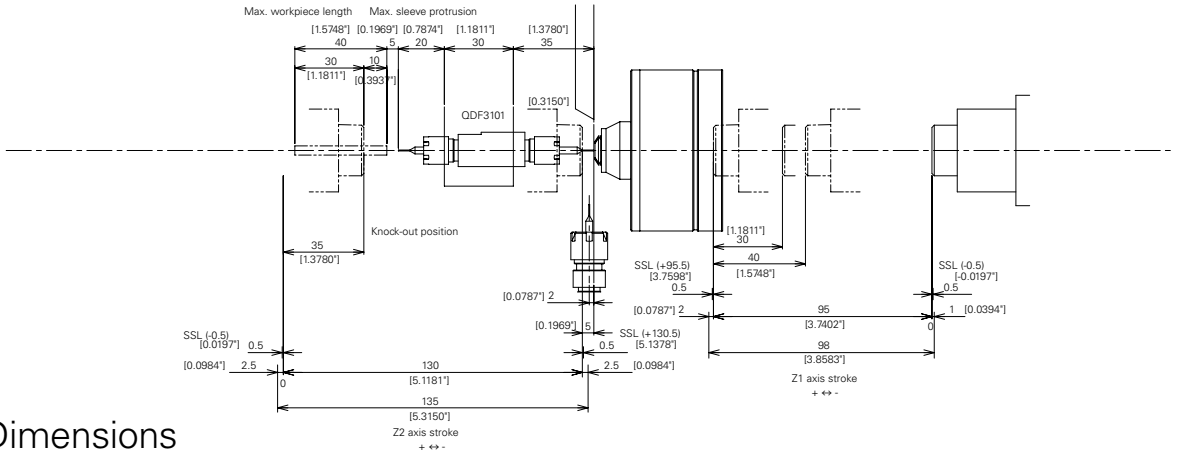

External Dimensions

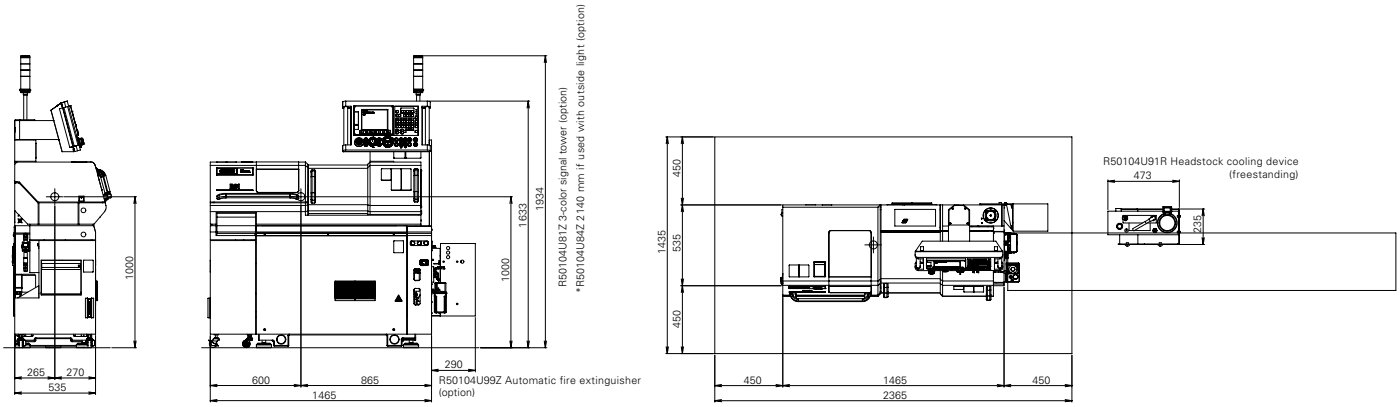

Machine Specification

Item	R01 / R04	
	Type II(R01-5F2, R04-5F2)	Type VI(R01-5F6, R04-5F6)
Max. machining diameter (D)	1 mm / 4 mm dia.	
Max. machining length (L)		
Fixed guide bushing	20 mm / 40 mm	
Rotary guide bushing	20 mm / 30mm	
Max. front drilling diameter	3 mm dia.	
Max. front tapping diameter	M3 (cutting tap)	
Spindle through-hole diameter	10 mm dia.	
Spindle speed	Max. 20,000 min^{-1}	
Max. chuck diameter of the back spindle	---	1 mm / 4mm dia.
Max. workpiece protrusion length from the back spindle	---	10 mm
Maximum collectable part length	20 mm / 40 mm	
Max. drilling diameter in the back machining	---	3 mm dia.
Max. tapping diameter in the back machining	---	M3
Back spindle speed	---	Max. 20,000 min^{-1}
Rotary tool on the gang tool post		
Max. drilling diameter	2 mm dia.	
Max. tapping diameter	M2 (cutting tap)	
Spindle speed	Max. 8,000 min^{-1}	
Number of tools mountable	13	17
Turning tool	7	7
Rotary tool on the gang tool post	2 (3^{OP})	2 (3^{OP})
Front drilling tool	4	4
Back drilling tool	---	4
Tool size		
Tool (gang)	8 mm sq.	
Sleeve	15.875 mm sq.	
Chucks / bushings		
Spindle collet chuck	FCD08-M	
Back spindle collet chuck	---	FCD08-M
Rotary tool collet chuck	ER11	
Chuck for drill sleeves	ER8, ER11	
Guide bushing	WFG044-M	
Rapid feed rate		
All axes	30 m/ min	
Motor		
for spindle drive	0.5/ 0.75 kW	
for rotary tool on the gang tool post	0.1 kW	
for back spindle drive	---	0.5/ 0.75 kW
for coolant	0.06 kW	
for lubrication	0.003 kW	
Center height	1,000 mm	
Rated power consumption	2.3 kVA	3.4 kVA
Full-load current (main breaker capacity)	5 A(20 A)	10 A(20 A)
Pneumatic device Required pressure, Required flow rate	0.5 MPa, 32 NL/min (At power ON) / 70 NL/min (In normal state) / 136 NL/min (During air blow)	
Machine footprint	1,465 × 535 × 1,633 mm	
Weight	1050 kg	1100 kg

Main standard accessory devices	
Spindle chucking device	Back spindle chucking device *Only for type VI
Headstock cooling device	Rotary tool spindle drive device of the gang tool post
Coolant device (with level detector)	Lubricating device (with level detector)
Workpiece separator	Longitudinally adjustable fixed guide bushing device
Machine relocation detector	

Special accessory devices	
Open/close guide bushing device	Knock-out jig for through-hole workpiece
Suction-type workpiece separator	Compact (4-division) workpiece separator
Cut-off tool breakage detector	Signal lamp
3-color signal tower	Coolant flow rate detector
Work light	Magnet-equipped filter

Standard NC functions	
Axis feed overlap function	Preprocessing function
In-machine tool set function	On-machine program check function
Manual data input (MDI) function	Manual feed function
Background edit function	Display of code list
Part count function	Cycle time check function
Automatic backlight turning-off function	Input/output interface
Door open detection function	Door lock function
Automatic power-off function	Optional stop
Memory protection function	Interference check function
Machine lock	Chamfering ON / OFF
Exact stop check	Error detect ON / OFF
Tool offset 16 pairs	Subprogram call function
Spindle speed fluctuation detection function	Spindle constant surface speed control function
Continuous thread cutting	Thread cutting canned cycle
Back spindle pick-off failure detection function	Program storage capacity 40 m (16 KB)
Sub-microns command	Spindle 15° indexing function
Optional block skip	Chamfering/Corner rounding
Multiple repetitive cycle for turning	Canned cycle drilling
Nose radius compensation	

Special additional NC functions	
Spindle C-axis function	Spindle synchronized tapping function
Spindle synchronized control function *Only for type VI	Spindle 1° indexing function
Back spindle synchronized tapping function	Back spindle 1° indexing function *Only for type VI
Back spindle C-axis function *Only for type VI	Rotary tool synchronized tapping function
Cut-off tool breakage detection function program	B code I/F
Tool offset pairs 32 pairs	Tool life management I
User macro	Tool life management II
Polygon machining function	Program storage capacity 80 m (32 KB)
Variable lead thread cutting	Program storage capacity 120 m (48 KB)
Optional block skip (9 sets)	Program storage capacity 160 m (64 KB)
Sub inch command	Program storage capacity 320 m (128 KB)
Drawing dimension direct input	Program storage capacity 600 m (240 KB)
Network I/O function	Program storage capacity 1280 m (512 KB)
Environmental Information	Program storage capacity 2560m (1MB)

Environmental Information

Basic Information	Energy usage	Supply voltage Electrical power requirement Required pneumatic pressure	AC200V 2.3 kVA: Type II 3.4 kVA: Type VI 0.5MPa
Environmental Performance Information	Power consumption	Standby power Power consumption with model workpiece*1 Power consumption value above converted to a CO2 value*2	0.314kW 0.0052kWh/ cycle 2.58 g / cycle
	Air consumption	Required air flow rate	32Nl / min(Power on), 70Nl / min (Normal state), 136Nl / min (With air blow)
	Lubricating oil consumption	At power ON	0.6cc / 60min
	Noise level	Value measured based on JIS	75.4dB
	Environmental load reduction	RoHS Directive / REACH regulations	Compliant
Approach to Environmental Issues	Recycling	Indication of the material names of plastic parts	Covered in the instruction manual*3
	Environmental management		We pursue "Green Procurement", whereby we make our purchases while prioritizing goods and services that show consideration for the environment.

*1 : This is the power consumption in program operation (when not cutting) for one of our standard test pieces, shown for the purpose of comparing the environmental performance with that of existing models.
*2 : This is the value converted in accordance with the CHUBU Electric Power CO2 emissions coefficient for 2014 as published by the Ministry of the Environment.
*3 : If polyvinyl chloride (PVC) and fluoric resin are not processed correctly, they can generate harmful gases. When recycling these materials, commission a contractor that is capable of processing them appropriately.

CITIZEN MACHINERY CO., LTD.

CITIZEN

JAPAN	CITIZEN MACHINERY CO.,LTD. 4107-6 Miyota, Miyota-machi, Kitasaku-gun, Nagano-ken, 389-0206, JAPAN	TEL.81-267-32-5901	FAX.81-267-32-5908
SOUTH ASIA / KOREA	CITIZEN MACHINERY CO.,LTD. 4107-6 Miyota, Miyota-machi, Kitasaku-gun, Nagano-ken, 389-0206, JAPAN	TEL.81-267-32-5916	FAX.81-267-32-5928
TAIWAN	CINCOM MIYANO TAIWAN CO.,LTD. 10Fl., No.174, Fuh Sing N. Rd., Taipei, TAIWAN	TEL.886-2-2715-0598	FAX.886-2-2718-3133
CHINA	CITIZEN (CHINA) PRECISION MACHINERY CO.,LTD. 10058, XINHUA ROAD OF ZHOUCUN, ZIBO, SHANDONG, P.R. CHINA	TEL.86-533-6150560	FAX.86-533-6161379
EUROPE-Germany	CITIZEN MACHINERY EUROPE GmbH Mettinger Strasse 11, D-73728 Esslingen, GERMANY	TEL.49-711-3906-100	FAX.49-711-3906-106
EUROPE-UK	CITIZEN MACHINERY UK LTD 1 Park Avenue, Bushey, WD23 2DA, UK	TEL.44-1923-691500	FAX.44-1923-691599
EUROPE-Italia	CITIZEN MACCHINE ITALIA s.r.l. Via Campo Romano 11/13 - 24050 Spirano (BG), ITALY	TEL.39-035-877738	FAX.39-035-876547
AMERICA	MARUBENI CITIZEN-CINCOM INC. 40 Boroline Road Allendale, NJ 07401, U.S.A.	TEL.1-201-818-0100	FAX.1-201-818-1877

URL:**http://cmj.citizen.co.jp/**

All specifications are subject to change without prior notice. This product is an export control item subject to the foreign exchange and foreign trade act. Thus, before exporting this product, or taking it overseas, contact your CITIZEN machine dealer. Please inform your CITIZEN machine dealer in advance of your intention to re-sell, export or relocate this product. For the avoidance of doubt products includes whole or part, replica or copy, technologies and software. In the event of export, proof of approval to export by government or regulatory authority must be evidenced to CITIZEN. You can operate the machines after the confirmation of CITIZEN.
CITIZEN is a registered trademark of Citizen Holdings Co., Japan.

PRINTED IN JAPAN JUN 2016