CITIZEN

Miyano

ABX65/80THY
ABX65/80SYY

Fixed Headstock Type CNC Automatic Lathe

Revamped ABX Series
ϕ80 mm and ϕ65 mm

The flagship model of the Miyano brand, packed with functionality in the smallest floor space in the industry.
Four models are available: the ABX80THY and ABX80SYY, which feature a ϕ80mm spindle on the front side and provides a new machining area, and the ABX65THY and ABX65SYY, which expand the range of machining by increasing the size of the front and back spindles to ϕ65mm.

High-rigidity slideways and spindle motors with increased power greatly improve the basic performance.
These models are certified as EcoBalance Machines that feature Citizen' s unique environmental technology including visualization of power consumption and reduction of air consumption.

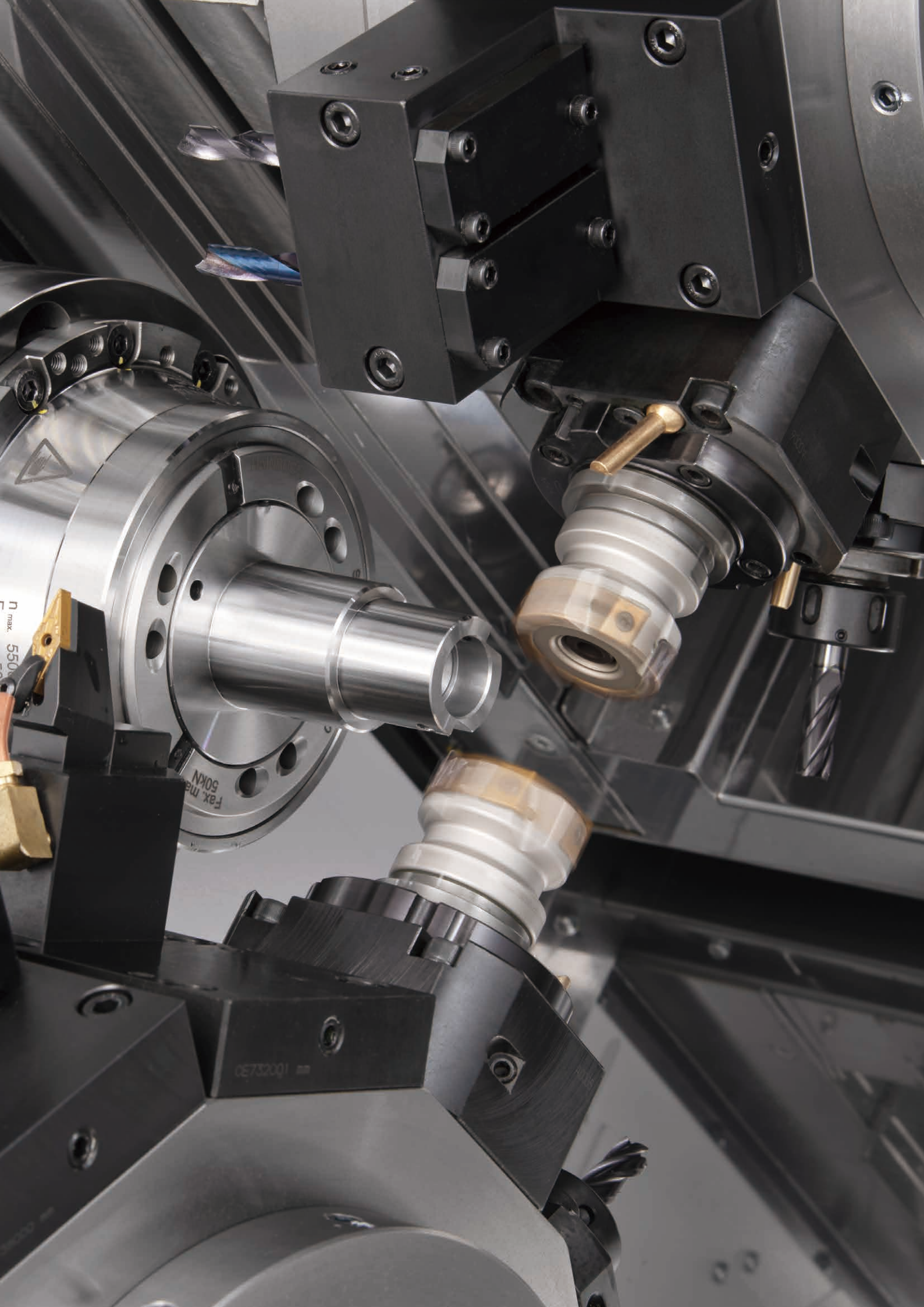

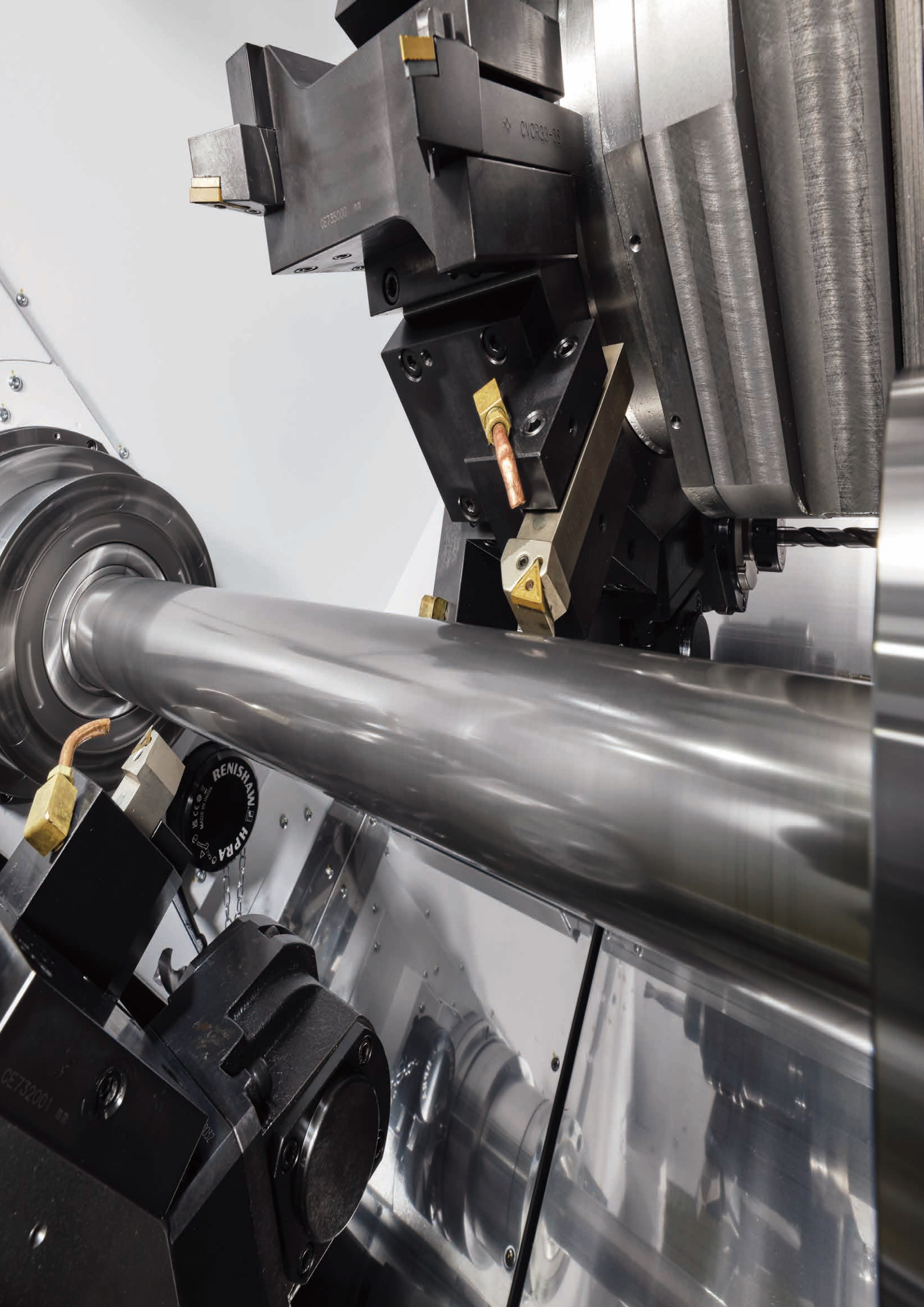
RENISHAW
HPRA

ABX-THY

Constructed with two spindles and three turrets, the machine has a lower turret that can approach both spindles without restriction, allowing flexible process distribution together with the left and right upper turrets.
It accomplishes powerful cutting with 40 Nm revolving tools. Simultaneous machining using three turrets equipped with the Y axis allows machining of complex shapes.
A total of 36 tool stations provided by the three 12-station turrets enables highly productive tool setup, including tooling for multiple workpieces at the same time.

THY

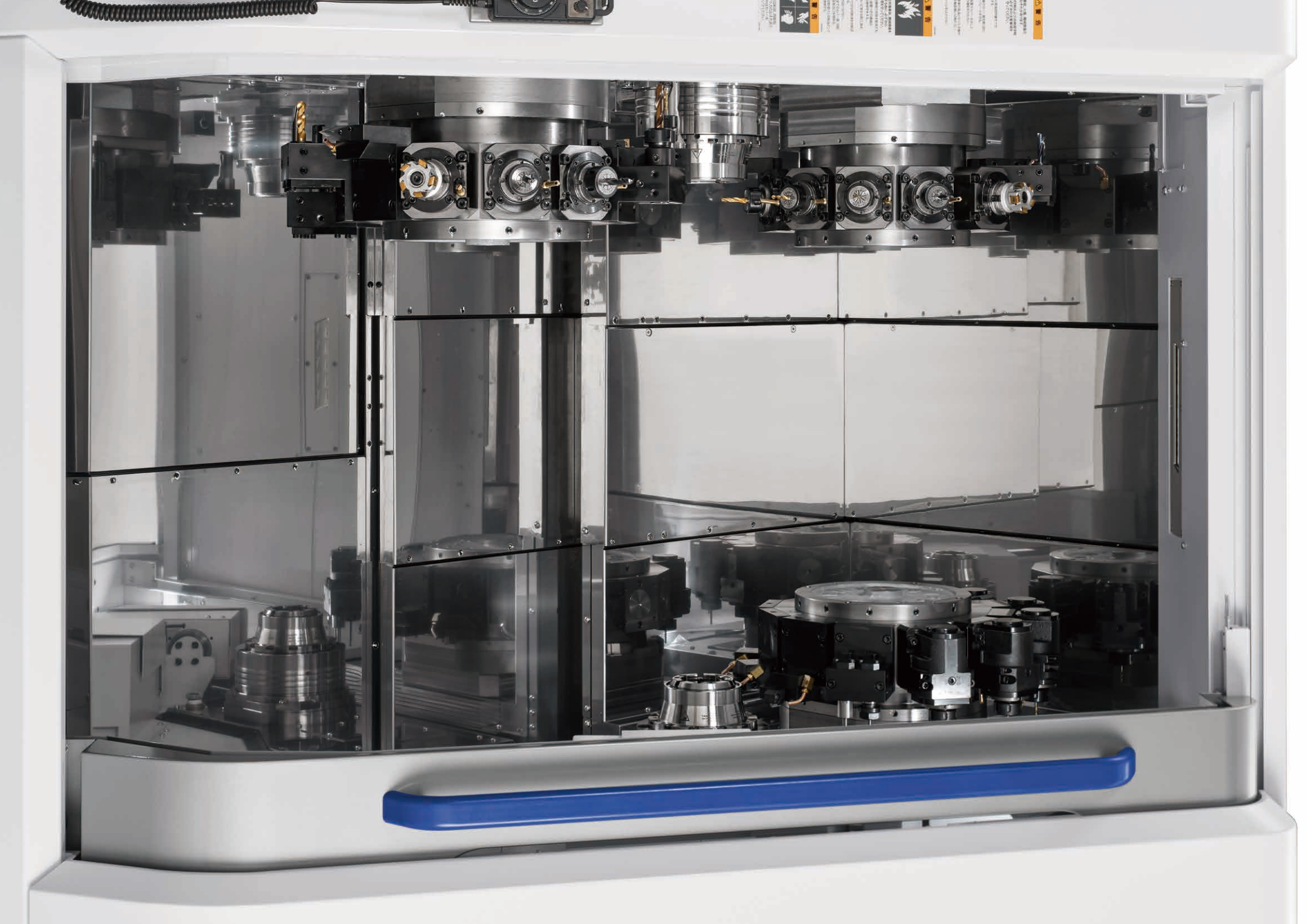

ABX-SYY

Constructed with two spindles and two turrets, the machine features the Y-axis on the upper and lower turrets, allowing simultaneous machining in conjunction with the front and back spindles.
It also excels in pinch turning of long workpieces utilizing its long strokes, achieving efficiency through simultaneous machining using two turrets.
The upper and lower turrets, which can approach either spindle in a generous machining space, are easy to use and can handle a variety of workpieces.

SYY

Basic Construction of the ABX-THY

Spindle 1
Spindle speed : 5,000 min^{-1}(65THY)/ 4,000 min^{-1}(80THY)
Collet chuck type : DIN 185E
HAINBUCH(Dia. 65)
H-S26
HAINBUCH(Dia. 80)
Power chuck type : 6" power chuck

Turret 1
Turret station : 12 stations
Revolving tool capacity : Max. 12 tools
Rotational speed of revolving tools : 6,000 min^{-1}
Revolving tool torque : 40 Nm

Turret 3
Type of the tool slide : 12 stations
Revolving tool capacity : Max. 12 tools
Rotational speed of revolving tools : 6,000 min^{-1}
Revolving tool torque : 40 Nm

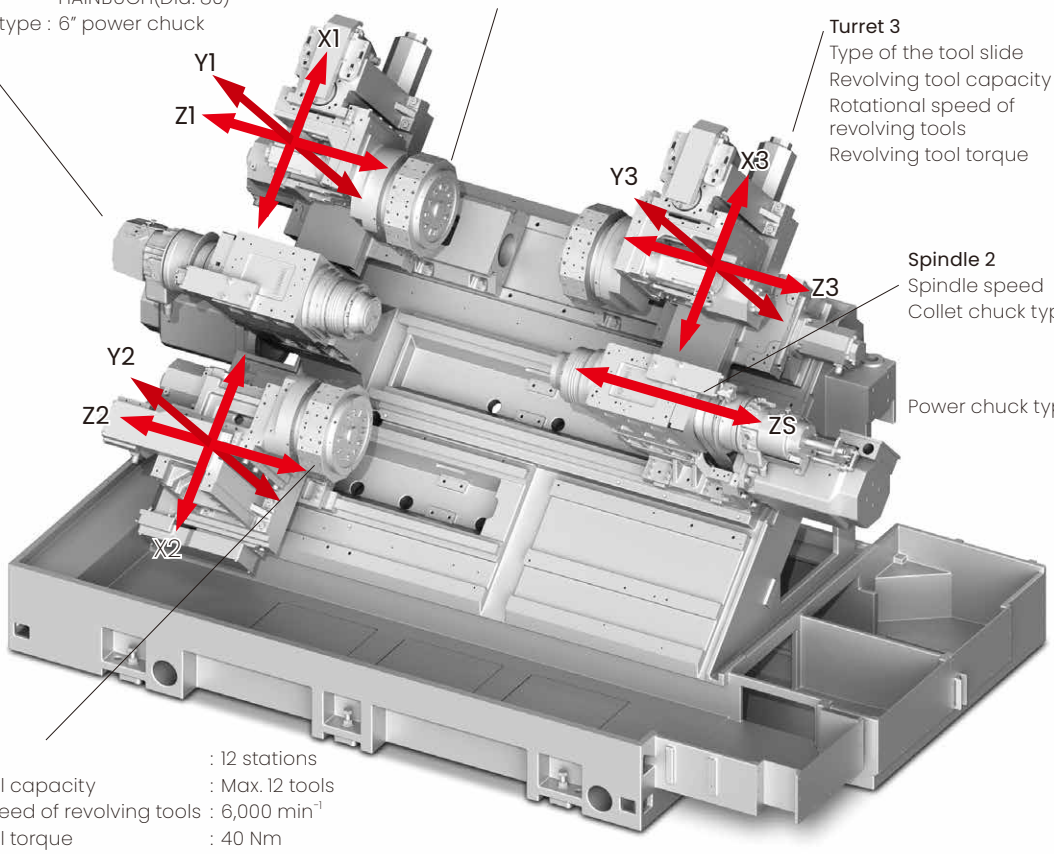

Spindle 2
Spindle speed : 5,000 min^{-1}
Collet chuck type : DIN 185E
H-S26
HAINBUCH
(Dia. 65, Dia. 80)
Power chuck type : 6" power chuck

Turret 2
Turret station : 12 stations
Revolving tool capacity : Max. 12 tools
Rotational speed of revolving tools : 6,000 min^{-1}
Revolving tool torque : 40 Nm

Equipped with a ϕ 80mm front spindle

With the ABX80THY/ABX80SYY, the maximum machining diameter of the front spindle is Dia. 80 mm, and the back spindle can also be used with an Dia. 80-mm chuck. This configures a new machining area.

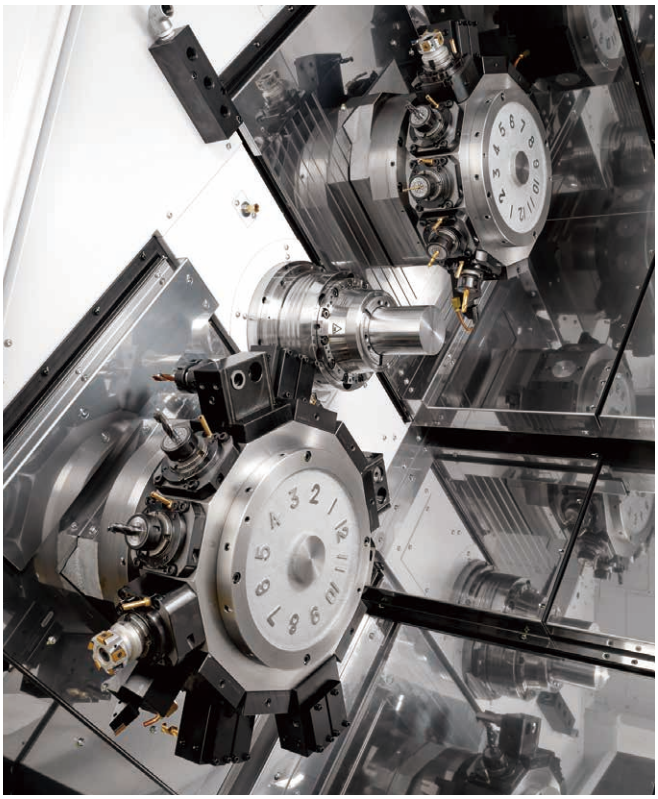

Front of ABX80THY

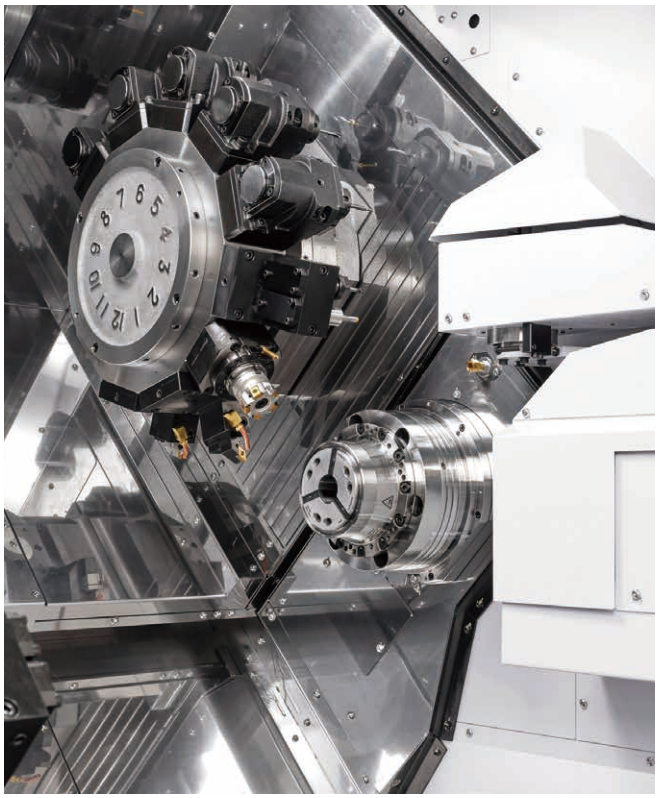

Back of ABX80THY

Basic Construction of the ABX-SYY

Spindle 1
Spindle speed : 5,000 min^{-1}(65SYY)/ 4,000 min^{-1}(80SYY)
Collet chuck type : DIN 185E
HAINBUCH(Dia. 65)
H-S26
HAINBUCH(Dia. 80)
Power chuck type : 6" power chuck

Turret 2
Turret station : 12 stations
Revolving tool capacity : Max. 12 tools
Rotational speed of revolving tools : 6,000 min^{-1}
Revolving tool torque : 40 Nm

Spindle 2
Spindle speed : 5,000 min^{-1}
Collet chuck type : DIN 185E
H-S26
HAINBUCH
(Dia. 65, Dia. 80)
Power chuck type : 6" power chuck

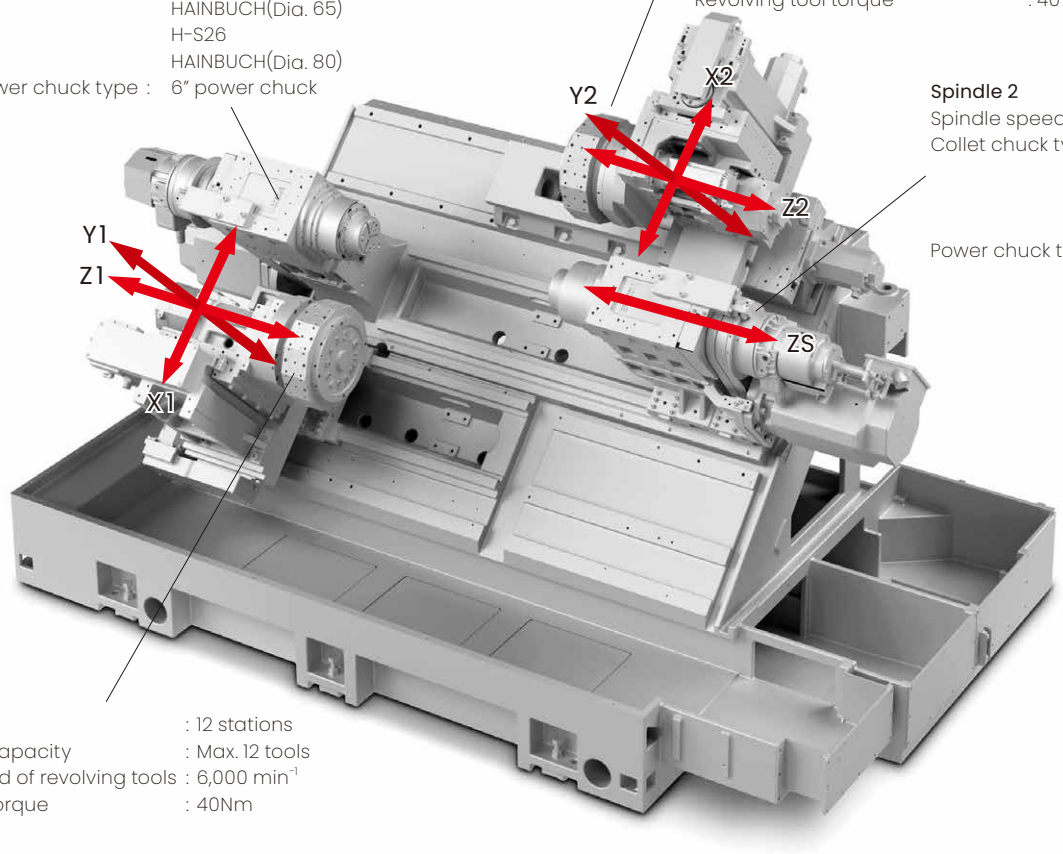

Turret 1
Turret station : 12 stations
Revolving tool capacity : Max. 12 tools
Rotational speed of revolving tools : 6,000 min^{-1}
Revolving tool torque : 40Nm

19-inch touchscreen operation panel

The center of the screen is set at the optimal height, and the panel surface is inclined, to facilitate operations by touch so as to reduce fatigue.

Large window area

The visibility in the tooling area is greatly improved. This means that the chuck end face and machining point can be seen at a glance.

EcoBalance Machine

CITIZEN MACHINERY aims to create a sustainable society by innovating customers' manufacturing workflow with a focus on their future issues as well as their current ones. We work to continuously enhance corporate value through "sustainable management" that takes into account social issues such as human rights and the global environment throughout the value chain, while at the same time promoting the provision of sustainable products such as our proprietary technologies, which include LFV (low-frequency vibration cutting) technology, the "FA-friendly" robot system, and "alkapplysolution" utilizing ICT technology, centering on the Cincom and Miyano brands.

Technology Supporting "EcoBalance Machine"

Idling stop function

Used to stop unnecessary machine operation in the standby status where no programmed operation is in progress, thereby reducing power consumption.

Air blow intermittent discharge function

Air consumption is reduced through intermittent control of the air blow.

Power consumption visualized

The EcoIl function visualizes power consumption and CO2 emissions on the screen to support customers' efforts to save energy.

Spindle air purge function incorporated

An air purge function is standard on front and back spindles. This prevents coolant from entering the spindles, protecting their bearings and other internal structures. In addition, the spindle air purge is turned ON/OFF automatically according to operating status in order to suppress air consumption.

Air purge OFF during setup or non-operation, and air purge ON during coolant discharge or machine operation

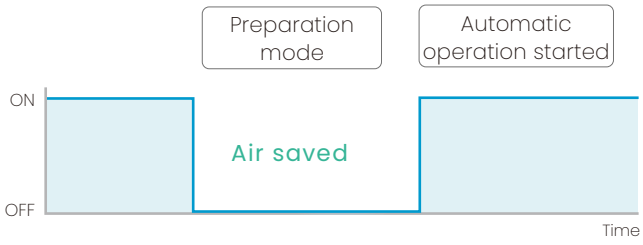

Ball screw diameter enlarged to 32 mm diameter for all axes

The ball screw diameter for all axes has been increased to improve rigidity. This also helps to extend the machine's service life.

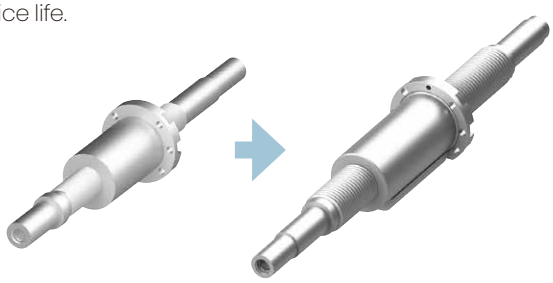

Thermal displacement correction function

This makes it possible to maintain a high level of accuracy during cutting, and increases machine reliability.
Warm-up operation time is also shortened, which contributes to power and labor savings.

Part catcher

The maximum load length (maximum collection length) is 150 mm, and the maximum weight is 6.5 kg.

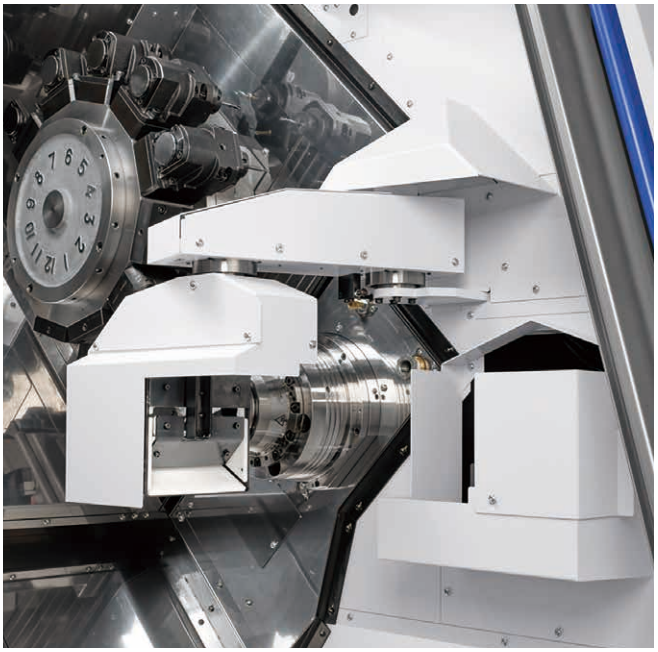

Spindle diagnosis function

The health status of the spindles is shown on the NC screen. Early detection of spindle faults prevents unexpected machine stoppages and contributes to stable production.

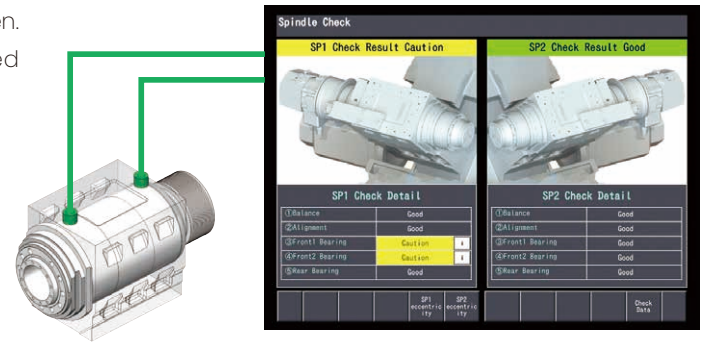

External View

Common

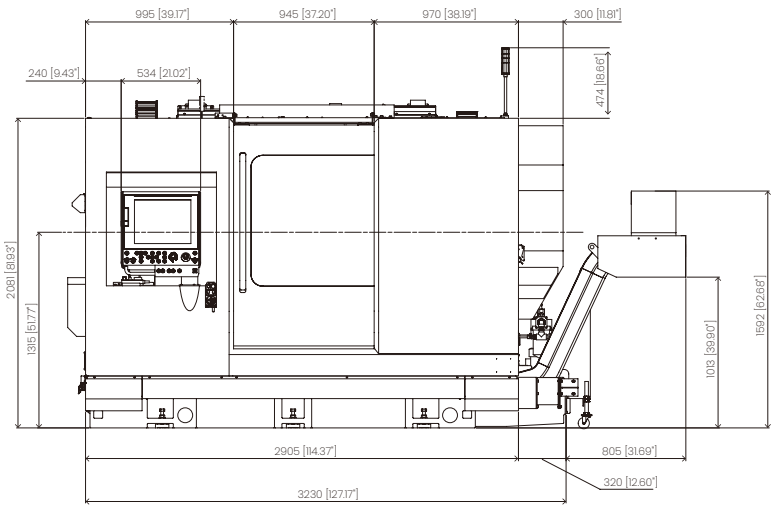

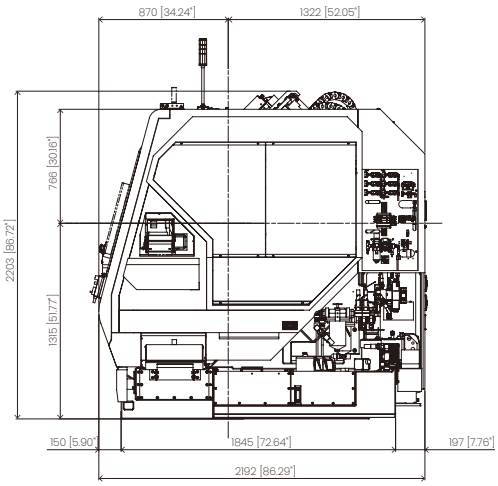

ABX-THY

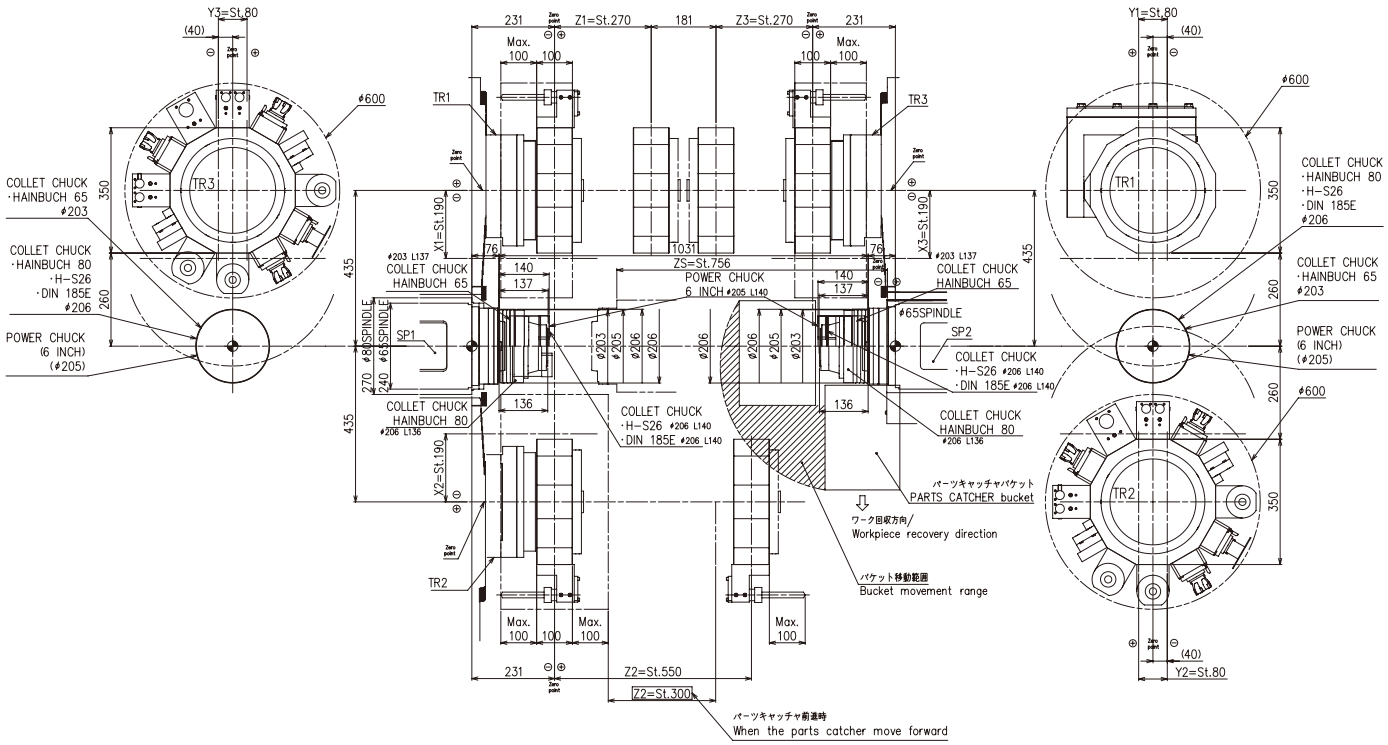

ABX-SYY

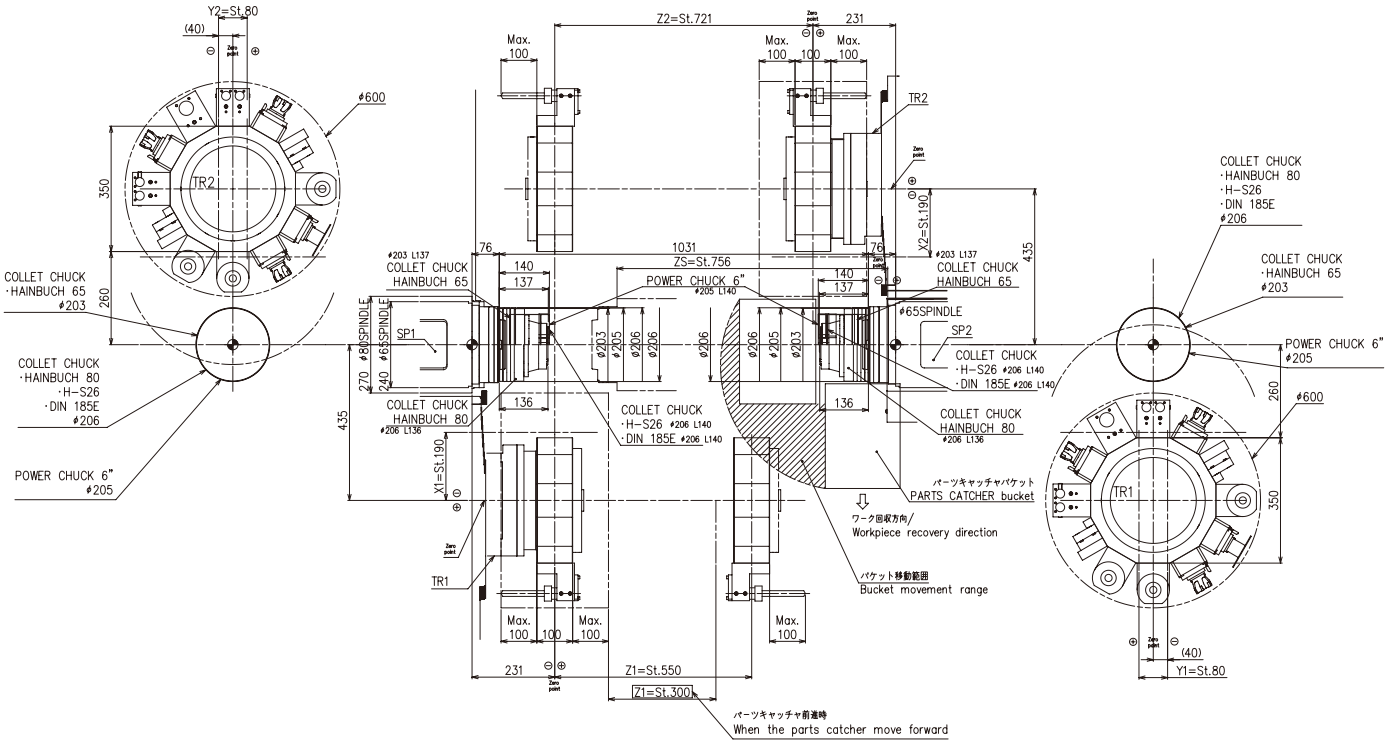

Tooling System

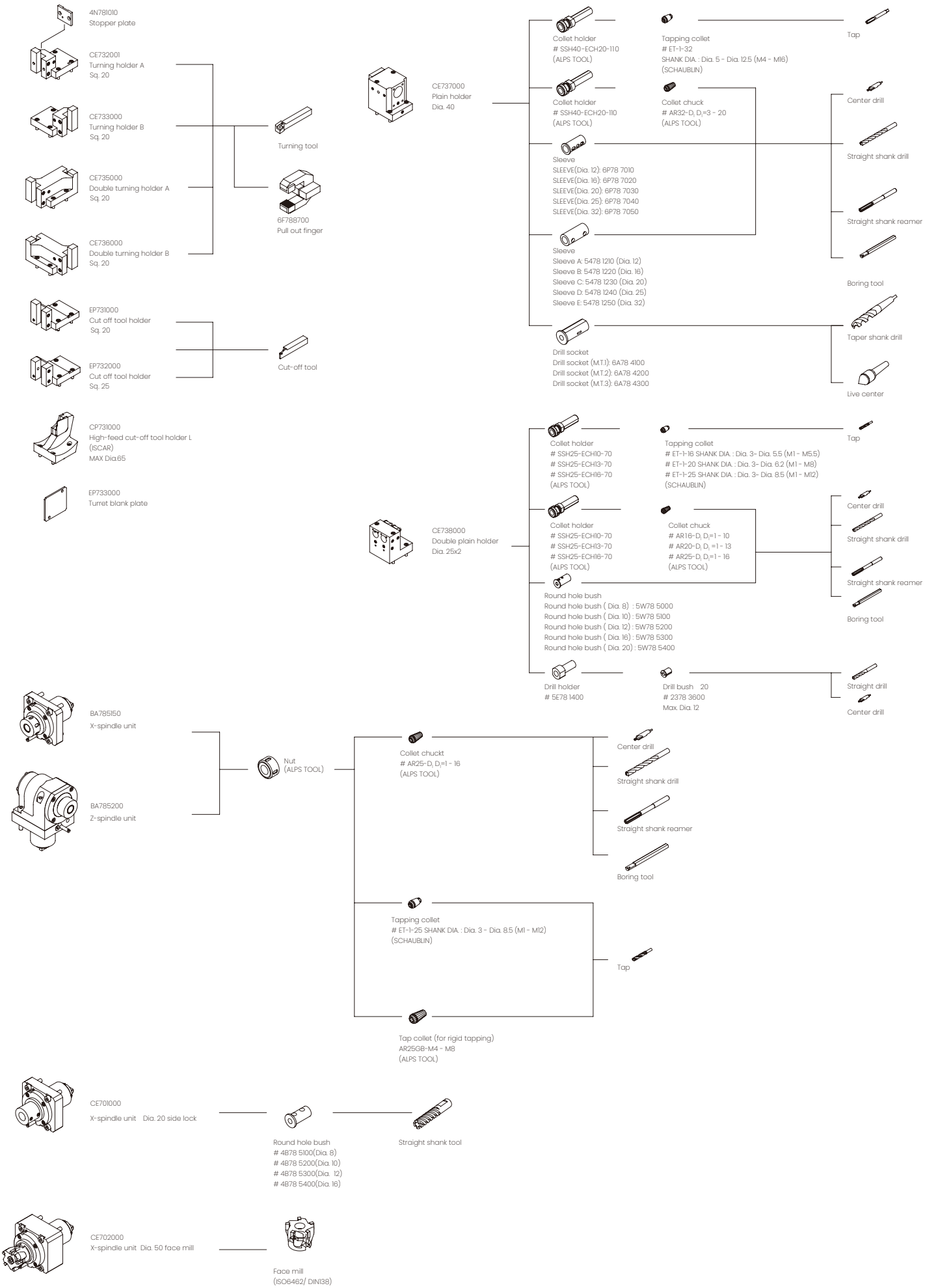

Machine Specifications

Item		ABX-65THY3	ABX-80THY3	ABX-65SYY3	ABX-80SYY3
Capability					
Standard machining diameter (gripping diameter)	SP1	Dia. 65 mm	Dia. 80 mm	Dia. 65 mm	Dia. 80 mm
	SP2	Dia. 65 mm	Dia. 80 mm	Dia. 65 mm	Dia. 80 mm
Distance between spindle end faces		1031 mm			
Slide stroke					
TR1, TR2, TR3	X1, X2 axes	190 mm			
	X3 axes	190 mm		---	
	Z1 axes	270 mm		550 mm	
	Z2 axes	550 mm		721 mm	
	Z3 axes	270 mm		---	
	Y1, Y2 axes	80 (±40) mm			
	Y3 axes	80 (±40) mm		---	
	ZS axes	756 mm			
Spindle					
Number of spindles		2			
Spindle speed	SP1	5,000 min^{-1}	4,000 min^{-1}	5,000 min^{-1}	4,000 min^{-1}
	SP2	5,000 min^{-1}			
Draw tube through-hole diameter	SP1	Dia. 66 mm	Dia. 81 mm	Dia. 66 mm	Dia. 81 mm
	SP2	66 mm Dia.			
Collet chuck type	SP1	DIN 185E	---	DIN 185E	---
		HAINBUCH 65	HAINBUCH 80	HAINBUCH 65	HAINBUCH 80
		H-S26	---	H-S26	---
	SP2	DIN 185E, HAINBUCH 65/ 80, H-S26			
Power chuck type	SP1, SP2	6" POWER CHUCK			
Machining capacity	SP1, SP2 Drill	Dia. 25 mm			
	Tap	M22 × P2.5			
Spindle indexing					
Minimum spindle indexing command	SP1, SP2	0.001°			
Tool post					
Number of tool slides		3		2	
Type of tool post	TR1, TR2	12 st.			
	TR3	12 st.		---	
Distance between opposite sides of tool slide	TR1, TR2	350 mm			
	TR3	350 mm		---	
Maximum indexing diameter of tool slid	TR1, TR2	Dia. 600 mm			
	TR3	Dia. 600 mm		---	
Dimensions of tools used		Sq. 20 mm			
Dimensions of tool mounting holes		Dia. 25 mm			
Revolving Tool					
Revolving tool capacity		Max. 12/ 12/ 12		Max. 12/ 12	
Revolving tool drive type		Single drive mechanism			
Rotational speed of revolving tools		6,000 min^{-1}			
Machining capacity	Drill	Max. Dia. 20 mm			
	Tap	Max. M14 x P2.0			
Feed rate					
Rapid feed rate	X1, X2 axes	20 m/ min			
	X3 axes	20 m/ min		---	
	Z1 axes	20 m/ min		30 m/ min	
	Z2 axes	30 m/ min		20 m/ min	
	Z3 axes	20 m/ min		---	
	Y1, Y2 axes	12 m/ min			
	Y3 axes	12 m / min		---	
	ZS axes	30 m/ min			
Motor for feed axes	X1, X2, Z1, Z2, ZS axes	1.8 kW			
	X3, Z3 axes	1.8 kW		---	
	Y1, Y2 axes	1.2 kW			
	Y3 axes	1.2 kW		---	
Motor drive					
Motor for spindle	SP1, SP2	18.5/ 15 kW (30min./ cont.)			
Motor for revolving tools	TR1, TR2	4.5 kW			
	TR3	4.5 kW		---	
Motor for coolant pump		0.25 kW × 2			
Motor for medium-pressure coolant (1 MPa) (option)		0.8/ 1.1 kW (50/ 60Hz) × 2		0.8/ 1.1 kW (50/ 60Hz) × 1	
Required power source					
Power source used		AC 200/ 220 V + 5 % - 10 % 50/ 60 Hz ± 1 %			
Rated power consumption		56.4 kVA		51.6 kVA	
Load operation average power consumption		33.1 kVA		31.7 kVA	
Fuse capacity at machine side		250 A			
Pneumatic source		0.5 MPa			
Tank capacity					
Hydraulic tank capacity		18 L			
Lubricating oil tank capacity		5 L			
Coolant tank capacity		400 L			
Machine size					
Machine height		2,210 mm			
Required floor space (length x width)		3,260 × 2,200 mm			
Machine weight		11,300 kg		10,700 kg	

Special Accessories

Air blow	Workpiece ejector
Automatic fire extinguisher	Chip box
Part conveyor	Medium-pressure coolant (1 MPa)
Internal air blow	Turret air blow
Tool setter	Part catcher
Part box	Chuck system
Chip conveyor	Mist collector duct & fire prevention damper
Spindle inner bushing	3-color signal tower
Remnant front ejector	Drill checker
RS-232C	

Standard NC Functions

FANUC Series 31i-MODEL B Plus	19-inch SXGA touch panel
USB slot	On-machine program check function
Operating time display	Product counter: max. 8 digits
Automatic power-off function	Collision detection function
Tool offset pairs 200	Program storage capacity 4 MB
User macro	Corner chamfering/Corner rounding
Optional block skip 9 sets	Spindle constant surface speed control function
Spindle C-axis function	Spindle synchronized function
Canned drilling cycle	Helical interpolation function
Synchronized tapping function	Sub-micron specifications
Inch specifications	Sub-inch specifications
Thermal displacement correction function	Variable lead thread cutting
Multiple repetitive cycle for turning	Milling interpolation function
Cylindrical interpolation	Polygon turning function
Spindle diagnosis function	

Special Additional NC Functions

Tool offset pairs 400	Program storage capacity 8 MB
Tool monitor	RS-232C connector

Environmental Information

Basic information	Model/Type		ABX-65/ 80THY3	ABX-65/ 80SYY3
	Energy usage	Power supply voltage	AC200V±10 %	
		Rated power consumption*1	56.4 kVA	51.6 kVA
		Load operation average power consumption *2	33.1 kVA	31.7 kVA
		Required pneumatic pressure	0.5 MPa	
Environmental performance information	Power consumption	Standby power *3	1.09 kW	0.882 kW
		Power consumption with model workpiece *4	0.363 kWh/ cycle	0.317 kWh/ cycle
		CO2e value of above power consumption *5	152.8 g/ cycle	133.5 g/ cycle
	Air consumption	Required pneumatic flow rate *6	31 L/min (Power ON), 36 L/min (Normal) (Max. 375 L/min: when using air blow)	31 L/min (Power ON), 34 L/min (Normal) (Max. 308 L/min: when using air blow)
	Lubricant consumption	At power ON	4.2 cc/ 15min	2.9cc/15min
	Noise level	Value measured according to JIS	73 dB	
Approach to environmental issues	Recycling	Indication of the material names of plastic parts	Covered in the Parts List (separate volume) *7	
	Environmental management		- We have obtained ISO14001 certification. - We pursue "Green Procurement", whereby we make our purchases while prioritizing goods and services that show consideration for the environment.	

*1 The rated power consumption is the power consumption when the machine is in operation at full capacity.
*2 The load operation average power consumption is the standard power consumption during machine operation. The actual power consumption varies depending on the cutting conditions and other conditions.
*3 This is the standby power in the idle stop mode (a function that turns servomotor excitation off when it is not necessary, for example during program editing).
*4 This is the power consumption in program operation (when not cutting) for one of our standard test pieces, shown for the purpose of comparing the environmental performance with that of existing models.
*5 This is the value converted in accordance with the CHUBU Electric Power CO2 emissions coefficient (basic emissions coefficient) for 2024 as published by the Ministry of the Environment.
*6 The "power ON" value is the value immediately after turning the machine power on; the value changes to 2.8 L/min a certain period after operation is stopped.
*7 If polyvinyl chloride (PVC) and fluoric resin are not processed correctly, they can generate harmful gases. When recycling these materials, commission a contractor that is capable of processing them appropriately.

CITIZEN

URL:**https://cmj.citizen.co.jp/**

CITIZEN MACHINERY CO., LTD.

JAPAN	CITIZEN MACHINERY CO.,LTD.	TEL.81-267-32-5901
SOUTH ASIA/ KOREA	CITIZEN MACHINERY CO.,LTD.	TEL.81-267-32-5961
ASEAN	CITIZEN MACHINERY ASIA CO., LTD.	TEL.66-35-90-2640
TAIWAN	CINCOM MIYANO TAIWAN CO.,LTD	TEL.886-2-2715-0598
CHINA	CITIZEN (CHINA) PRECISION MACHINERY CO., LTD.	TEL.86-533-6150560
GERMANY	CITIZEN MACHINERY EUROPE GmbH.	TEL.49-711-3906-100
UK	CITIZEN MACHINERY UK Ltd.	TEL.44-1923-691500
ITALIA	CITIZEN MACCHINE ITALIA s.r.l.	TEL.39-035-877738
FRANCE	CITIZEN MACHINERY FRANCE S.A.S.	TEL.33-4-5098-5269
SPAIN	EGASCA, S.A.	TEL.34-943-200300
AMERICA	MARUBENI CITIZEN-CINCOM INC.	TEL.1-201-818-0100

PRINTED IN JAPAN AUG. 2025